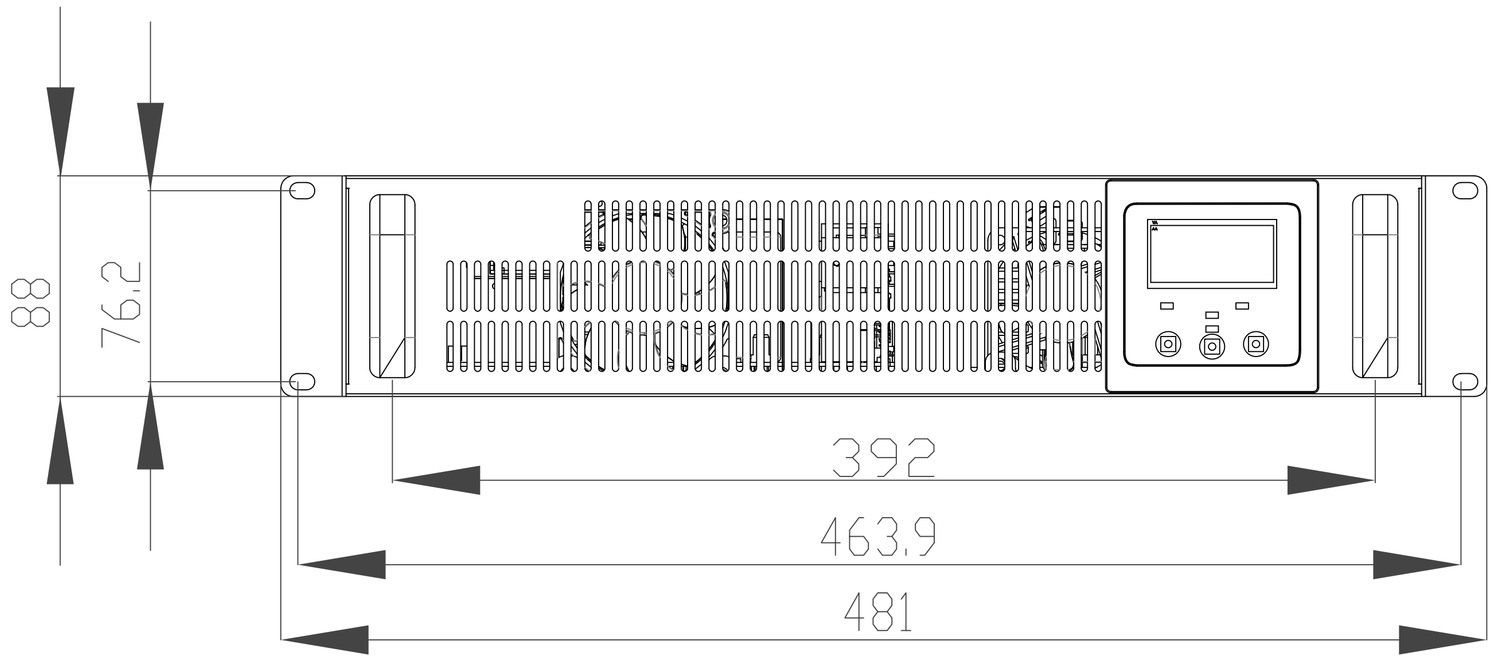
88
76.2
392
463.9
481

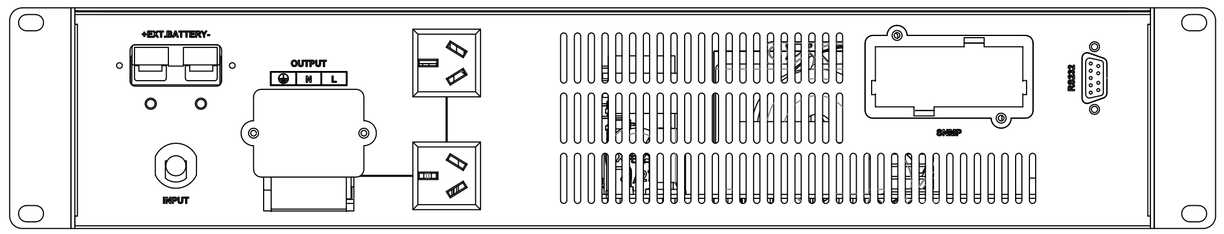
+EXT.BATTERY-
OUTPUT
N
L
INPUT
SNMP
RS232

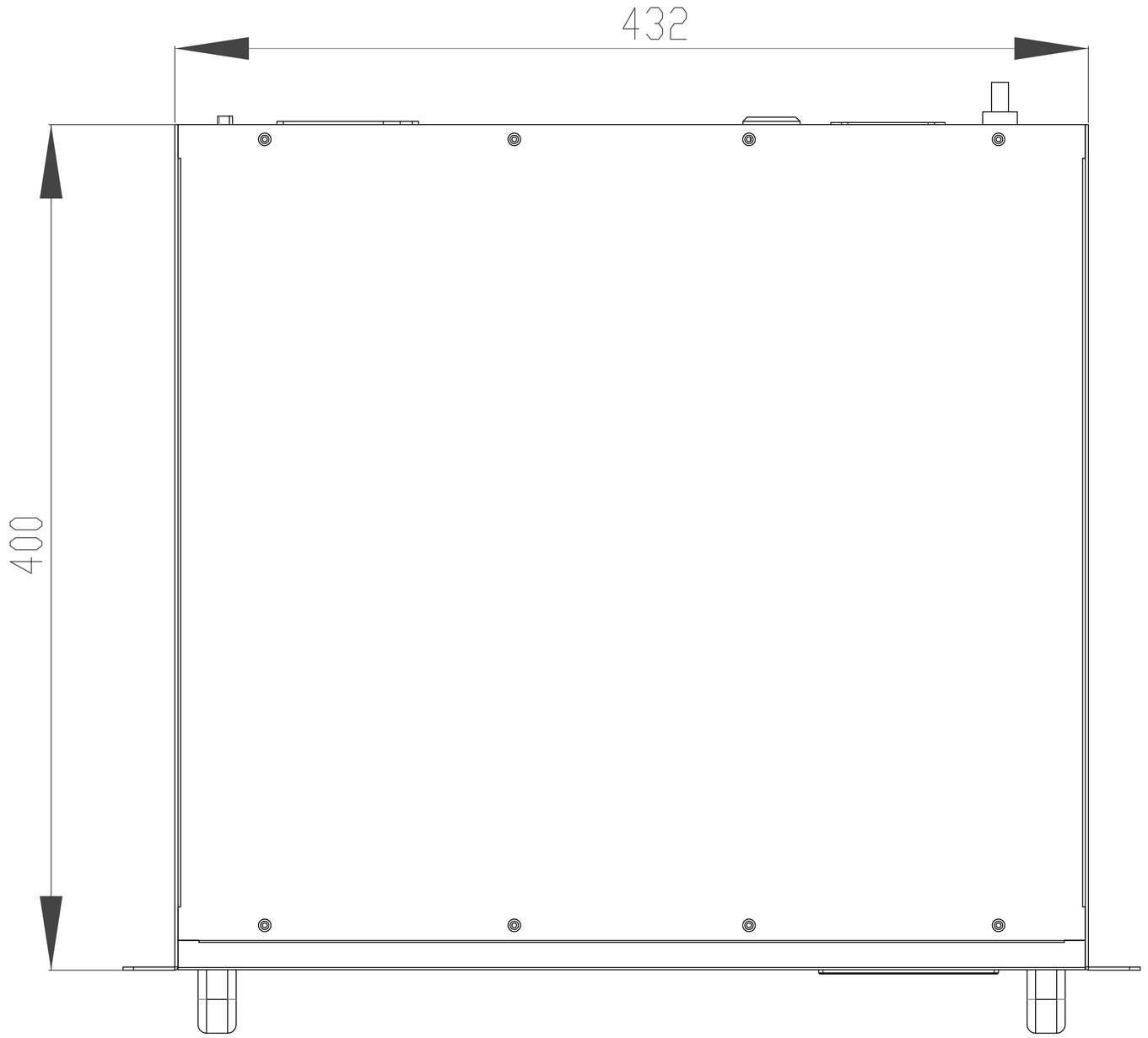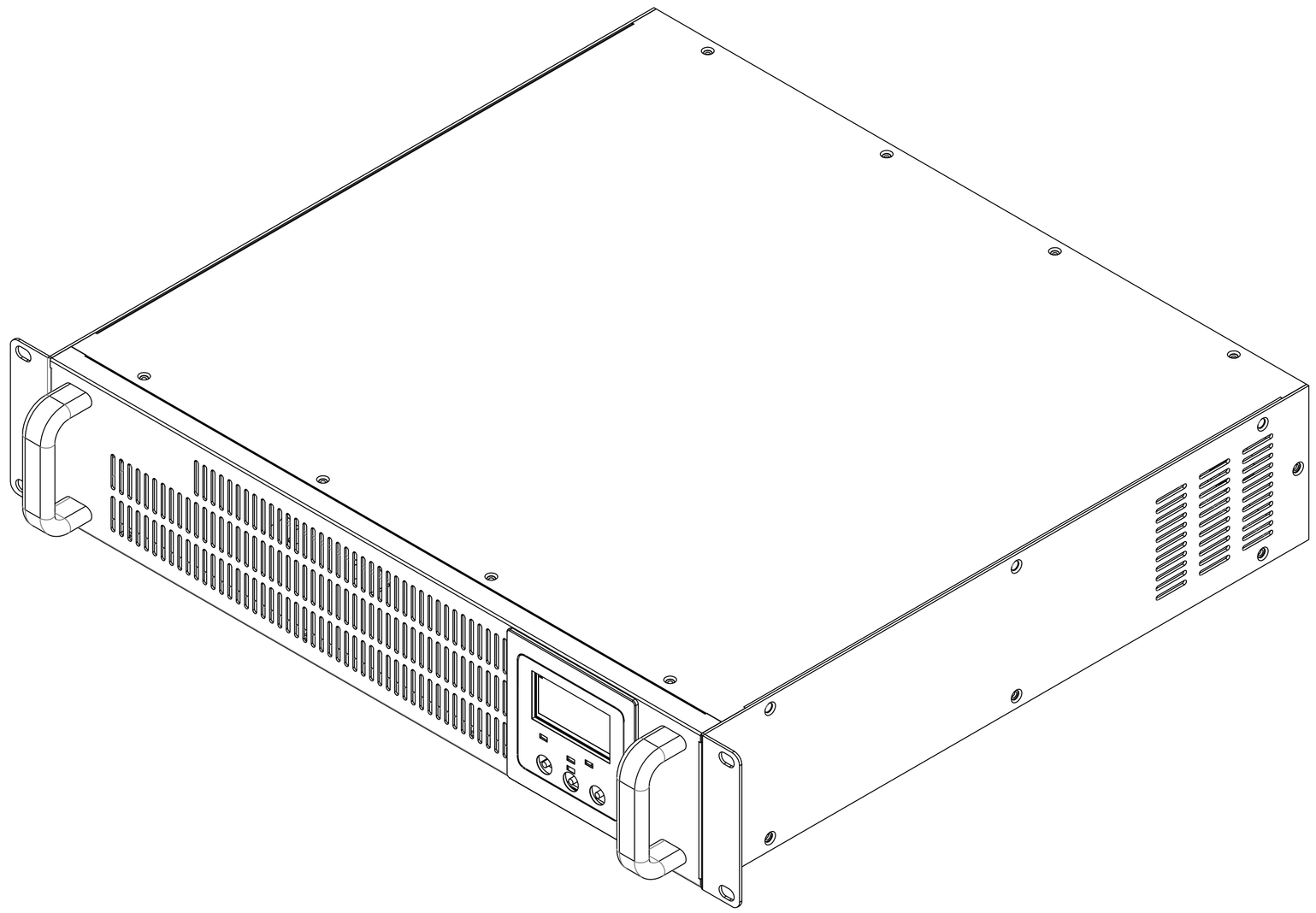
432
400